US008498741B2

(12) **United States Patent**
Ihrke et al.

(10) **Patent No.: US 8,498,741 B2**
(45) **Date of Patent: Jul. 30, 2013**

(54) **DEXTEROUS HUMANOID ROBOTIC WRIST**

(75) Inventors: **Chris A. Ihrke**, Hartland, MI (US); **Lyndon Bridgwater**, Houston, TX (US); **David M. Reich**, Huntsville, AL (US); **Charles W. Wampler, II**, Birmingham, MI (US); **Scott R. Askew**, Houston, TX (US); **Myron A. Diftler**, Houston, TX (US); **Vienny Nguyen**, Columbus, OH (US)

(73) Assignees: **GM Global Technology Operations**, Detroit, MI (US); **The United States of America as Represented by the Administrator of the National Aeronautics and Space Administration**, Washington, DC (US)

(*) Notice: Subject to any disclaimer, the term of this patent is extended or adjusted under 35 U.S.C. 154(b) by 912 days.

(21) Appl. No.: **12/564,088**

(22) Filed: **Sep. 22, 2009**

(65) **Prior Publication Data**

US 2011/0071671 A1 Mar. 24, 2011

(51) **Int. Cl.**

B25J 17/00	(2006.01)
B25J 17/02	(2006.01)
G06F 19/00	(2011.01)
B25J 18/04	(2006.01)

(52) **U.S. Cl.**
USPC **700/245**; 901/21; 901/36

(58) **Field of Classification Search**
USPC .. 74/490.01–490.15; 700/245–264; 901/1–50
See application file for complete search history.

(56) **References Cited**

U.S. PATENT DOCUMENTS

3,572,807	A	3/1971	Haaker et al.
3,580,099	A	5/1971	Mosher
3,627,372	A	12/1971	Carpenter et al.
3,631,737	A	1/1972	Wells
3,707,963	A	1/1973	Keropian
3,849,668	A	11/1974	Dane
3,922,930	A	12/1975	Fletcher et al.
4,073,201	A	2/1978	Taylor et al.

(Continued)

FOREIGN PATENT DOCUMENTS

DE	3734179	A1	4/1989
EP	0190907	A1	8/1986

(Continued)

OTHER PUBLICATIONS

http://robotics.nasa.gov/courses/fall2002/event/oct1/NASA_Robotics_20021001.htm.

Primary Examiner — Khoi Tran
Assistant Examiner — Dale Moyer
(74) *Attorney, Agent, or Firm* — Quinn Law Group, PLLC

(57) **ABSTRACT**

A humanoid robot includes a torso, a pair of arms, a neck, a head, a wrist joint assembly, and a control system. The arms and the neck movably extend from the torso. Each of the arms includes a lower arm and a hand that is rotatable relative to the lower arm. The wrist joint assembly is operatively defined between the lower arm and the hand. The wrist joint assembly includes a yaw axis and a pitch axis. The pitch axis is disposed in a spaced relationship to the yaw axis such that the axes are generally perpendicular. The pitch axis extends between the yaw axis and the lower arm. The hand is rotatable relative to the lower arm about each of the yaw axis and the pitch axis. The control system is configured for determining a yaw angle and a pitch angle of the wrist joint assembly.

19 Claims, 4 Drawing Sheets

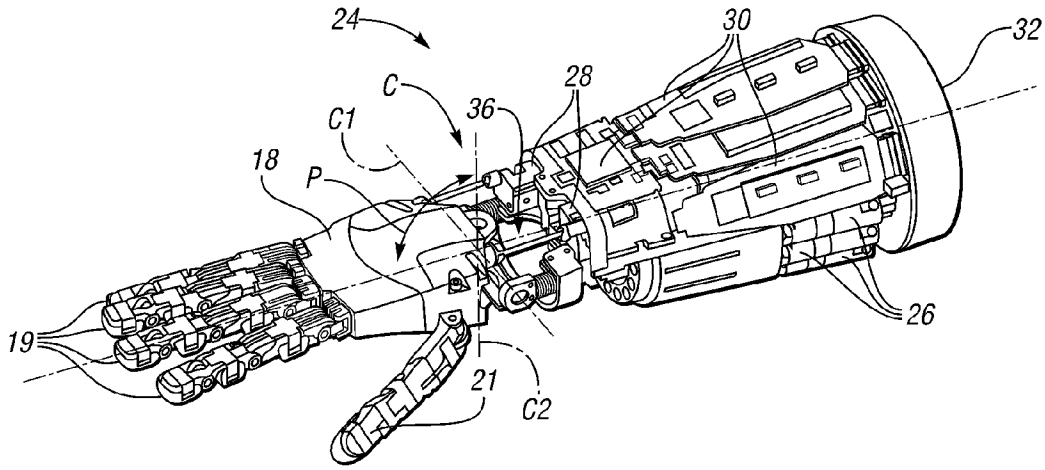

U.S. PATENT DOCUMENTS

4,113,115	A		9/1978	Yoshio
4,132,318	A		1/1979	Wang et al.
4,246,661	A		1/1981	Pinson
4,353,677	A		10/1982	Susnjara et al.
4,365,928	A		12/1982	Baily
4,499,790	A		2/1985	Helms
4,501,522	A		2/1985	Causer et al.
4,502,347	A		3/1985	Norris et al.
4,512,710	A		4/1985	Flatau
4,531,884	A		7/1985	Russell
4,568,311	A		2/1986	Miyake
4,574,655	A		3/1986	Kimura et al.
4,594,918	A		6/1986	Kimura et al.
4,606,695	A		8/1986	Lenz
4,628,765	A		12/1986	Dien et al.
4,634,889	A		1/1987	Foggia et al.
4,651,591	A		3/1987	Wurst
4,662,814	A		5/1987	Suzuki et al.
4,703,668	A		11/1987	Peter
4,744,264	A		5/1988	Milenkovic
4,762,016	A		8/1988	Stoughton et al.
4,762,455	A		8/1988	Coughlan et al.
4,787,262	A		11/1988	Kozawa et al.
4,790,718	A		12/1988	Vickers
4,804,220	A	*	2/1989	Rosheim 294/111
4,821,594	A	*	4/1989	Rosheim et al. 74/490.05
4,828,453	A		5/1989	Martin et al.
4,862,759	A		9/1989	Trevelyan et al.
4,878,393	A		11/1989	Duta et al.
4,907,937	A		3/1990	Milenkovic
4,919,382	A		4/1990	Forman
4,972,735	A		11/1990	Torii et al.
4,986,723	A		1/1991	Maeda
5,050,450	A		9/1991	Nakamura
5,101,681	A		4/1992	Shpigel
5,231,889	A		8/1993	Lee et al.
5,243,873	A		9/1993	Demers
5,447,403	A		9/1995	Engler, Jr.
5,596,254	A		1/1997	Vaughn et al.
5,697,256	A		12/1997	Matteo
5,740,699	A		4/1998	Ballantyne et al.
5,765,443	A		6/1998	Murase et al.
5,845,540	A	*	12/1998	Rosheim 74/490.05
5,966,991	A		10/1999	Gosselin et al.
5,967,580	A	*	10/1999	Rosheim 294/198
6,026,703	A		2/2000	Stanisic et al.
6,244,644	B1		6/2001	Lovchik et al.
6,658,962	B1	*	12/2003	Rosheim 74/490.05
6,741,911	B2		5/2004	Simmons
7,013,750	B1		3/2006	Kazami
7,296,835	B2		11/2007	Blackwell et al.
2003/0101838	A1		6/2003	Shinozaki
2005/0222587	A1		10/2005	Jinno et al.
2008/0075561	A1		3/2008	Takemura et al.
2008/0103492	A1	*	5/2008	Morley et al. 606/1
2009/0071282	A1		3/2009	Takemura
2010/0010670	A1		1/2010	Matsukuma et al.

FOREIGN PATENT DOCUMENTS

FR	2565881	A1	12/1985
JP	4008491	A	1/1992
WO	9213213	A1	8/1992
WO	03080297	A1	10/2003

* cited by examiner

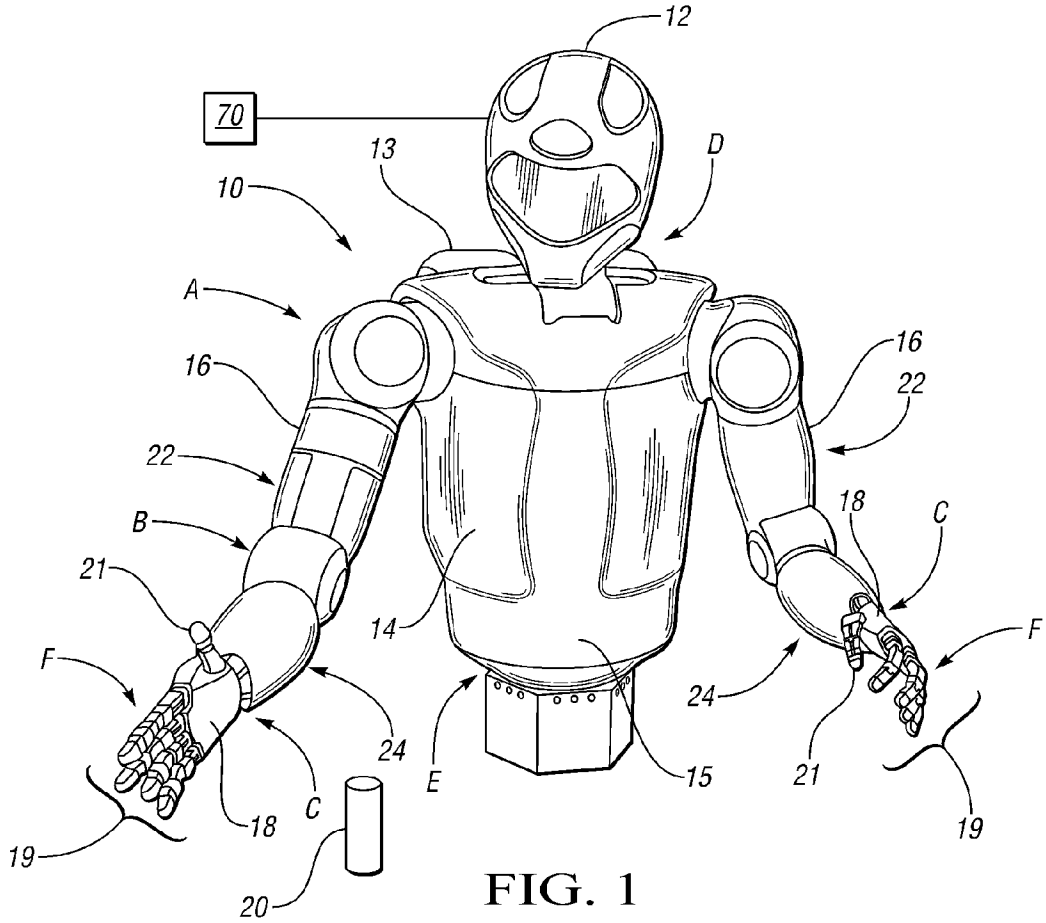
12
70
13
D
10
A
16
16
22
22
18
C
B
21
14
F
F
24
24
E
15
21
C
18
19
19
20

FIG. 1

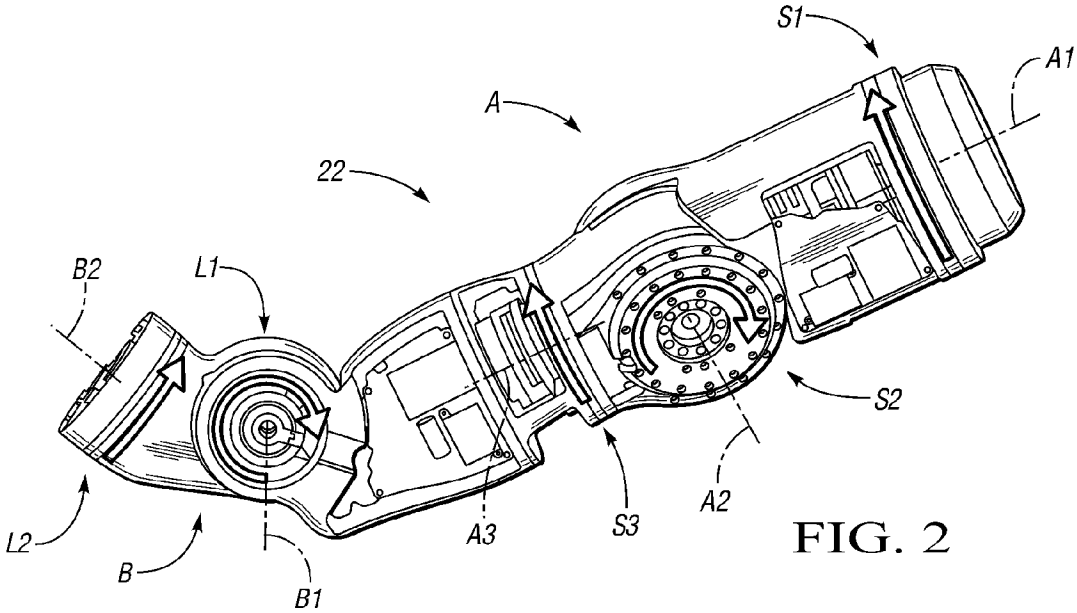
S1
A1
A
22
B2
L1
S2
A2
S3
A3
L2
B
B1

FIG. 2

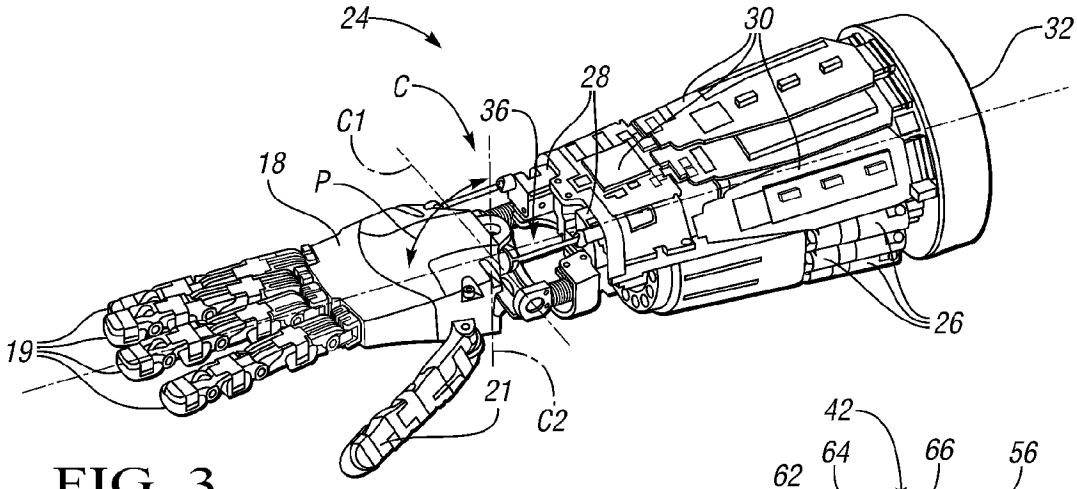

FIG. 3

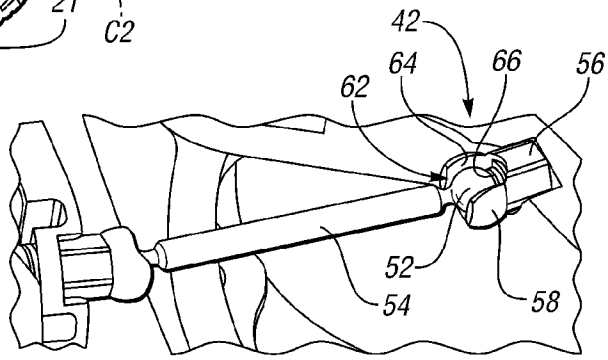

FIG. 4A

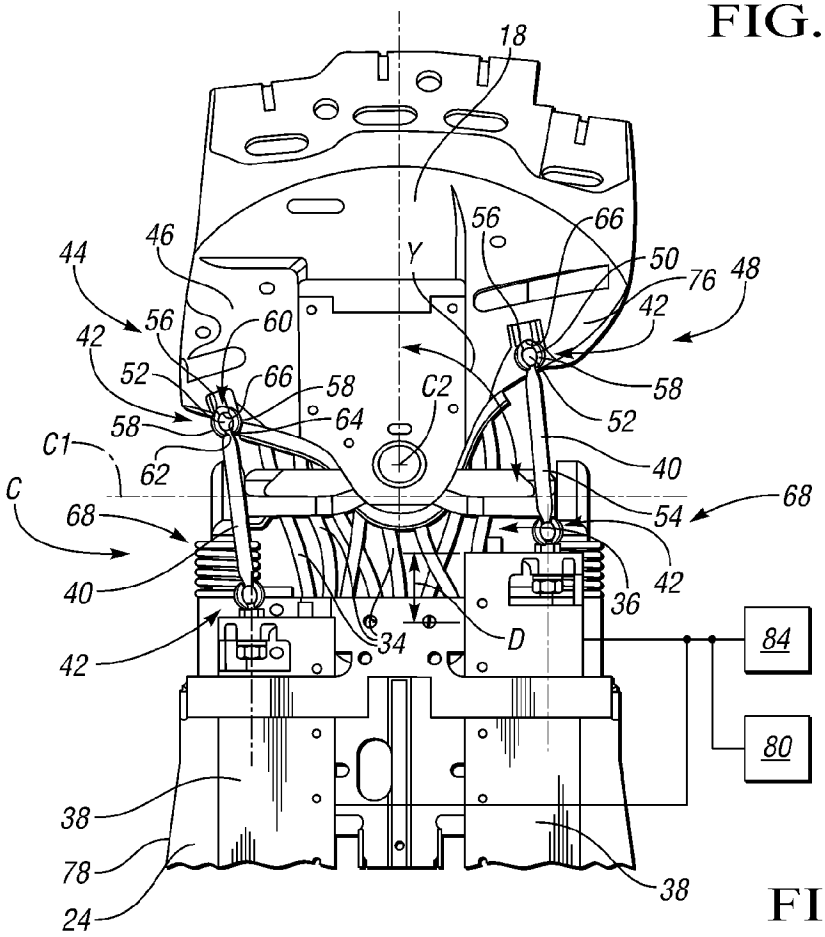

FIG. 4

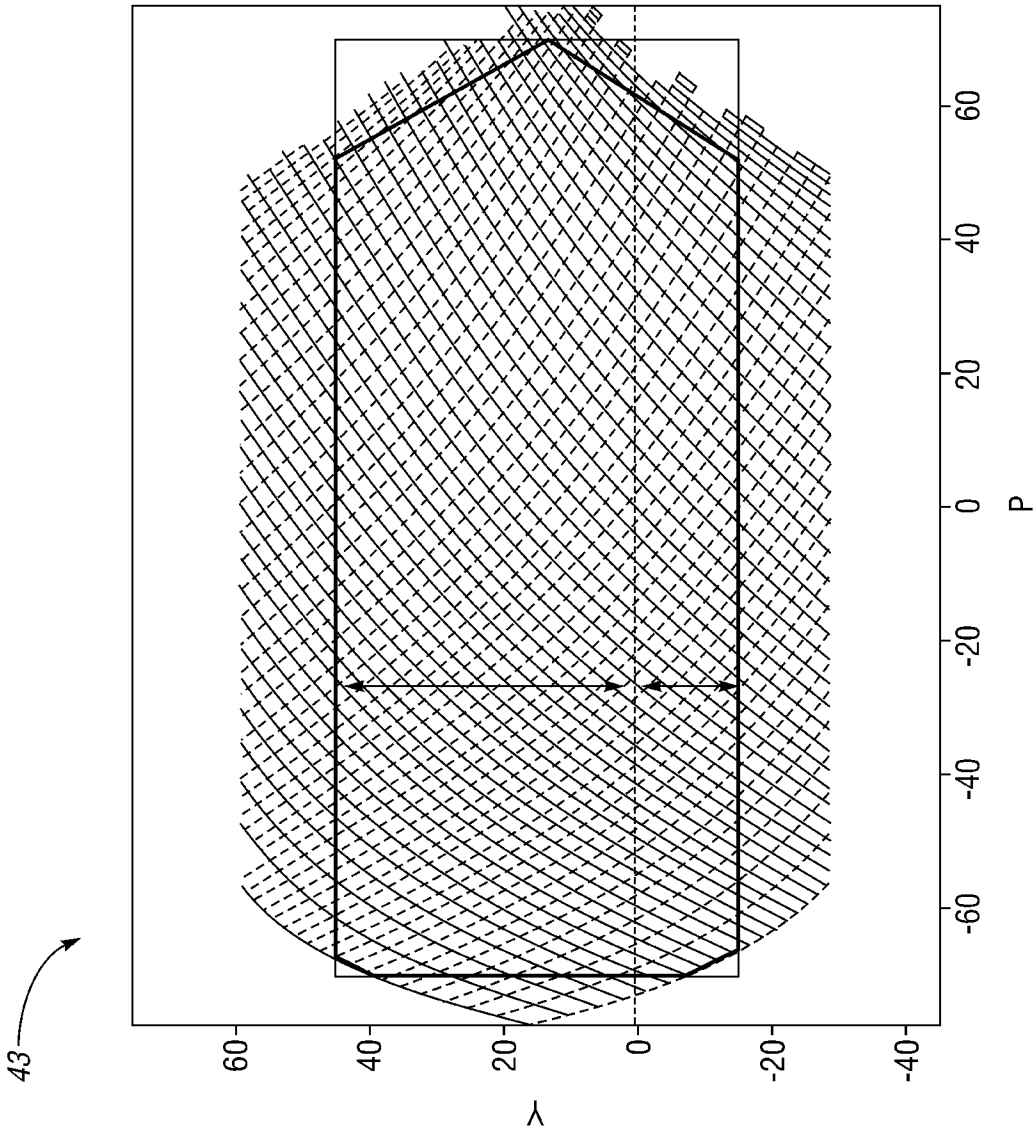

FIG. 5

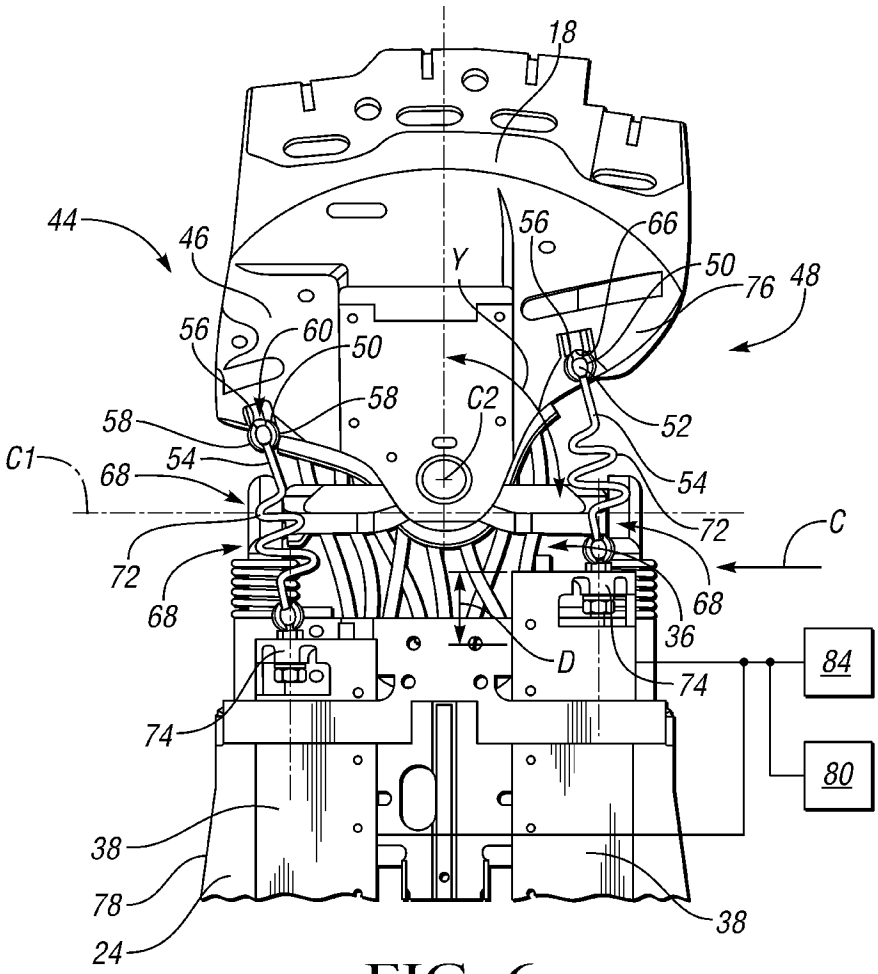
18
44
46
56
66
Y
50
76
48
56
60
50
58
C2
52
58
54
C1
68
54
72
C
72
68
68
36
D
84
74
74
80
38
78
24
38

FIG. 6

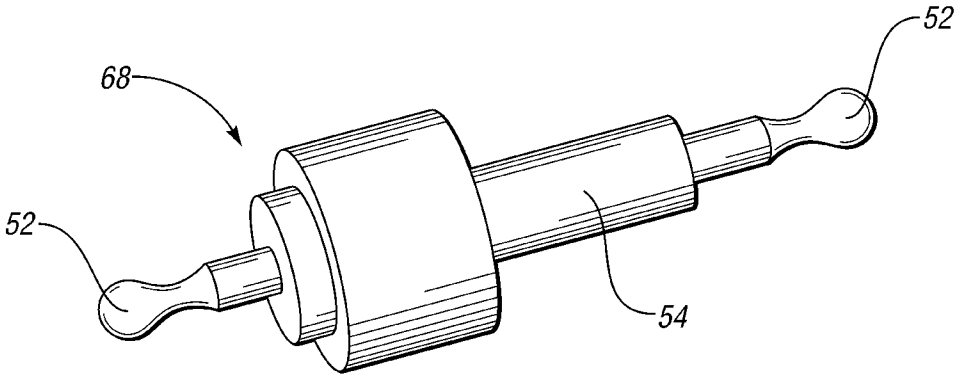
52
68
52
54

FIG. 7

DEXTEROUS HUMANOID ROBOTIC WRIST

STATEMENT REGARDING FEDERALLY SPONSORED RESEARCH OR DEVELOPMENT

This invention was made with government support under NASA Space Act Agreement number SAA-AT-07-003. The government may have certain rights in the invention.

TECHNICAL FIELD

The present invention relates to a wrist of a humanoid robot.

BACKGROUND OF THE INVENTION

Robots are automated devices that are able to manipulate objects using a series of rigid links, which in turn are interconnected via articulations or motor-driven robotic joints. Each joint in a typical robot represents an independent control variable, also referred to as a degree of freedom (DOF). End-effectors are the particular links used for performing a task at hand, e.g., grasping a work tool or an object. Therefore, precise motion control of a robot may be organized by the level of task specification: object level control, i.e., the ability to control the behavior of an object held in a single or cooperative grasp of a robot, end-effector control, and joint level control. Collectively, the various control levels cooperate to achieve the required robotic mobility, dexterity, and work task-related functionality.

Humanoid robots in particular are robots having an approximately human structure or appearance, whether a full body, a torso, and/or an appendage, with the structural complexity of the humanoid robot being largely dependent upon the nature of the work task being performed. The use of humanoid robots may be preferred where direct interaction is required with devices or systems that are specifically made for human use. Due to the wide spectrum of work tasks that may be expected of a humanoid robot, different control modes may be simultaneously required. For example, precise control must be applied within the different spaces noted above, as well control over the applied torque or force, motion, and the various grasp types.

In order to approximate human movement each major joint within the robot, such as waist or arm joints, requires at least one actuator for each DOF. However, in a multi-fingered hand, it may be advantageous to drive some combinations of finger joints from a common actuator, so that there are fewer actuators than finger joints. Nevertheless, a highly dexterous hand will have a plurality of actuators, perhaps as many as a dozen or more, to enable a variety of grasp configurations and fine manipulation of grasped objects. Additionally, these actuators must be packaged in an arrangement that approximately represents human structure and appearance.

SUMMARY OF THE INVENTION

Accordingly, a wrist joint assembly is provided herein that is operatively defined between a lower arm and a hand of a humanoid dexterous robot. The wrist joint assembly includes a yaw axis and a pitch axis. The pitch axis is disposed in a spaced relationship to the yaw axis such that the axes are generally perpendicular. The pitch axis extends between the yaw axis and the lower arm. The hand is rotatable relative to the lower arm about each of the yaw axis and the pitch axis.

In another aspect, an arm assembly of a humanoid dexterous robot includes a lower arm, a hand, a wrist joint assembly, and a control system. The hand is rotatable relative to the lower arm. The wrist joint assembly is operatively defined between the lower arm and the hand. The wrist joint assembly includes a yaw axis and a pitch axis. The pitch axis is disposed in a spaced relationship to the yaw axis such that the axes are generally perpendicular. The pitch axis extends between the yaw axis and the lower arm. The hand is rotatable relative to the lower arm about each of the yaw axis and the pitch axis. The control system is configured for determining a yaw angle and a pitch angle of the wrist joint assembly.

In yet another aspect, a humanoid robot includes a torso, a pair of arms, a neck, a head, a wrist joint assembly, and a control system. The arms movably extend from the torso. Each of the arms includes a lower arm and a hand that is rotatable relative to the lower arm. The neck movably extends from the torso. The head movably extends from the neck. The wrist joint assembly is operatively defined between the lower arm and the hand. The wrist joint assembly includes a yaw axis and a pitch axis. The pitch axis is disposed in a spaced relationship to the yaw axis such that the axes are generally perpendicular. The pitch axis extends between the yaw axis and the lower arm. The hand is rotatable relative to the lower arm about each of the yaw axis and the pitch axis. The control system is configured for determining a yaw angle and a pitch angle of the wrist joint assembly.

The above features and advantages and other features and advantages of the present invention are readily apparent from the following detailed description of the best modes for carrying out the invention when taken in connection with the accompanying drawings.

BRIEF DESCRIPTION OF THE DRAWINGS

FIG. **1** is a schematic perspective illustration of a dexterous humanoid robot and in accordance with the invention;

FIG. **2** is a schematic perspective illustration of an upper arm for the dexterous humanoid robot of FIG. **1**;

FIG. **3** is a schematic perspective illustration of a lower arm for the dexterous humanoid robot of FIGS. **1** and **2**;

FIG. **4** is a schematic illustration of a back view of the lower arm for the dexterous humanoid robot of FIGS. **1** and **3** having links for moving a hand;

FIG. **4**A is an enlarged schematic illustration of a link for the lower arm for the dexterous humanoid robot of FIGS. **1**, **3** and **4**;

FIG. **5** is a schematic graphical illustration representing yaw and pitch angles of a wrist joint assembly of the lower arm for the dexterous humanoid robot of FIGS. **1**, **3**, and **4**;

FIG. **6** is a schematic illustration of a back of the lower arm for the dexterous humanoid robot of FIGS. **1** and **3** having an alternate embodiment of the links for moving the hand; and

FIG. **7** is a schematic perspective illustration of another alternate embodiment of the links for moving the hand of FIG. **6**.

DESCRIPTION OF THE PREFERRED EMBODIMENT

With reference to the drawings, wherein like reference numbers refer to the same or similar components throughout the several views, FIG. **1** shows a dexterous humanoid robot **10** adapted to perform one or more tasks with multiple degrees of freedom (DOF).

The humanoid robot **10** may include a head **12**, torso **14**, waist **15**, arms **16**, hands **18**, fingers **19**, and thumbs **21**, with the various joints being disposed within or therebetween. A power supply **13** may be integrally mounted to the robot **10**,

e.g., a rechargeable battery pack carried or worn on the back of the torso **14** or another suitable energy supply, to provide sufficient electrical energy to the various joints for movement of the same.

According to one embodiment, the robot **10** is configured with a plurality of independently and interdependently-moveable robotic joints, such as but not limited to a shoulder joint assembly (arrow A), an elbow joint assembly (arrow B), a wrist joint assembly (arrow C), a neck joint assembly (arrow D), and a waist joint assembly (arrow E), as well as the various finger joint assemblies (arrow F) positioned between the phalanges of each robotic **10** finger **19**.

Each robotic joint may have one or more DOF. For example, certain joints such as the shoulder joint assembly (arrow A) and elbow joint assembly (arrow B) may have at least two DOF in the form of pitch and roll. Likewise, the neck joint assembly (arrow D) may have at least three DOF, while the waist and wrist assemblies (arrows E and C, respectively) may have one or more DOF. Depending on task complexity, the robot **10** may move with over 40 DOF. Although not shown in FIG. **1** for simplicity, each robotic joint in the waist (arrow E), neck (arrow D), and arms (arrows A and B) contains and is driven by one or more actuators, e.g., joint motors, linear actuators **38**, rotary actuators, and the like. Finger joints (arrow F) are also driven by actuators **26**, but it may be advantageous to mechanically couple some finger **19** motions so that in some cases one actuator **26** may drive several finger joints (arrow F). If the finger joints (arrow F) are driven by tendons **34**, which can only pull and cannot push, return motion requires either spring loading or an additional return tendon **34** with its own actuator **26**.

The arm **16** is divided into an upper arm **22** and a lower arm (or forearm) **24**. The upper arm **22** extends from the shoulder joint assembly (arrow A) to the elbow joint assembly (arrow B). Extending from the elbow joint (arrow B) is the lower arm **24**, hands **18**, fingers **19**, and thumbs **21**. For the purpose of simplification, as described herein, the upward direction is toward the head **12** and the downward direction is toward the waist **15**.

Referring to FIG. **2**, the upper arm **22** is illustrated. Although only one upper arm **22** for the arms **16** is shown, both the left and the right arms **16** operate in the same manner as described below. The upper arm **22** has a shoulder joint assembly (arrow A) that includes a first shoulder joint S**1** providing a first DOF, and second shoulder joint S**2** providing a second DOF, and a third shoulder joint S**3** providing a third degree of freedom. Together the first through third shoulder joints S**1**, S**2**, S**3** perform the movements that represent the movements a human shoulder can perform. Specifically, rotation of the first shoulder joint S**1** about a first shoulder axis A**1** moves a second shoulder axis A**2** for the second shoulder joint S**2** into a desired position. Based upon the position of the first shoulder joint S**1**, rotation of the second shoulder joint S**2** about the second shoulder axis A**2** then moves the arm **16** up and down relative to the torso **14**, or forward and backward relative to the torso **14**. The third shoulder joint S**3** rotates the upper arm **22** about a third shoulder axis A**3**. Rotation of the third shoulder joint S**3** rotates the upper arm **22** axially, i.e. rotation of the third shoulder joint S**3** rotates the elbow joint assembly (arrow B) to face upwards or downwards. Therefore, together the first shoulder joint S**1**, the second shoulder joint S**2**, and the third shoulder joint S**3** form the motions of a shoulder joint assembly (arrow A).

The upper arm **22** also includes an elbow joint assembly (arrow B) which includes a first elbow joint L**1** and a second elbow joint L**2**. The first elbow joint L**1** and second elbow joint L**2** each provide a degree of freedom. Together the first elbow joint L**1**, and the second elbow joint L**2** perform the movements that represent the movements a human elbow can perform. Rotation of the first elbow joint L**1** about a first elbow axis B**1** causes the upper arm **22**, below the elbow joint assembly (arrow B) to bend and straighten. Additionally, rotation of the second elbow joint L**2** about a second elbow axis B**2** causes the upper arm **22**, below the elbow joint assembly (arrow B) to rotate axially, i.e. rotation of the second elbow joint L**2** about the second elbow axis B**2** rotates the lower arm **24** and hand **18** (FIG. **1**) to face palm up or down.

FIG. **3** illustrates the lower arm **24**, including the wrist joint assembly (arrow C), the hand **18**, the fingers **19**, and thumb **21**. The lower arm **24** includes a plurality of finger **19** (and thumb **21**) actuators **26** and a plurality of wrist actuators **28**. Additionally, a plurality of electronics **30** configured for controlling the finger actuators **26** and the wrist actuators **28** are also supported on the lower arm **24**. The lower arm **24** is attached to a load cell **32** which is used to connect the lower arm **24** with the upper arm **22**.

The wrist joint assembly (arrow C) is disposed between the hand **18** and a lower arm **24**. The wrist joint assembly (arrow C) is configured with a large range of motion, typically described in terms of a pitch axis C**1** and a yaw axis C**2**. The pitch axis C**1** is disposed in a spaced relationship to the yaw axis C**2** such that the axes are generally perpendicular. More specifically, the pitch axis C**1** is positioned between the yaw axis C**2** and the lower arm **24** such that the pitch axis C**1** and the yaw axis C**2** do not intersect. Likewise, the yaw axis C**2** is positioned between the pitch axis C**1** and the hand **18**. The fingers and the thumb **21** require multiple actuators (not shown) to provide power and positional control. For example, a single finger might have four or five joints which need to be independently controllable. In some designs, a palm of the hand **18** may have additional motion capability to conform to the shape of an object being grasped. At the same time, to facilitate the hand **18** reaching into constricted areas, it is desirable that the hand **18** has a slim profile. To accomplish this, it may be preferable to locate the actuators in the forearm and to transmit mechanical power to the hand **18** via tendons or other such slender transmission elements **34**. Such a hand **18** is sometimes said to be "extrinsically actuated" in contrast to "intrinsically actuated" hands **18** that contain their own actuators. With four or five fingers **19** and thumbs **21**, each having up to five degrees of freedom, the hand **18** may easily require a dozen or more actuators. In order to package the required number of actuators in an intrinsically actuated hand **18**, smaller actuators are used. As a result, the intrinsically actuated hands **18** typically become too bulky, too slow, and/or too weak to perform the required dexterous work.

The wrist joint assembly (arrow C) for a dexterous robot **10** with an extrinsically actuated hand **18** is configured to provide a large range of pitch motion, about the pitch axis C**1**, and a wide range of yaw motion, about the yaw axis C**2**. Additionally, the wrist joint assembly is configured to be slender, i.e., have a slim profile, such that the hand **18** and the wrist joint assembly may perform dexterous work in constricted areas. The wrist joint assembly defines a pass-through **36**, i.e., an open space, which is configured to accommodate the transmission elements **34** that connect the actuators in the forearm to the joints in the hand **18** and/or fingers. When the transmission elements **34** are tendons, which are configured to only pull, not push, it may be desirable to provide antagonistic actuators (not shown) to maintain tension in the system. The wrist joint assembly (arrow C) also needs to be configured to be sufficiently strong and operate with sufficient speed to support the hand **18** doing useful work, when compared to humans.

Referring to FIGS. **4** and **4**A, the wrist joint assembly must also be actuated to achieve the yaw and pitch rotations about the respective yaw and pitch axes C**2**, C**1**. A pair of linear actuators **38** are slidably disposed in the lower arm **24** in a spaced relationship and are generally parallel to one another. A link **40** operatively interconnects a respective one of the pair of linear actuators **38** and the hand **18**. The links **40** are operatively interconnected to the linear actuator **38** and the wrist via ball joints **42**. The links **40** extend in spaced relationship and are generally parallel to one another. The linear actuators **38** operatively connect the forearm to the hand **18** to achieve the motion of rotation of the hand **18** about the yaw and pitch axes C**2**, C**1**, relative to the lower arm **24**. Each linear actuator **38** is configured to provide a long linear travel range to rotate the wrist about the yaw and/or pitch axis C**2**, C**1**, at a sufficient speed and force. In a preferred embodiment, the linear travel range of the linear actuator **38** is about 100 mm, the speed is about 80 mm/s, and the force ranges from about 320 N to about 1320 N, continuous. Two of the linear actuators **38** may be coupled with a desired kinematic arrangement to result in a wrist speed of about 120 degrees/second about the pitch and yaw axes C**1**, C**2**; a peak torque of about 200 Nm about the pitch axis C**1** and of about 150 Nm about the yaw axis C**2**; and a continuous wrist torque of about 25 Nm about each of the pitch and yaw axes C**1**, C**2**.

The wrist joint assembly is configured such that the relation between the displacement of the linear actuators **38** in the forearm and the resulting pitch and yaw of the wrist joint assembly (arrow C) are nonlinearly coupled and depend on a geometric placement of the ball joints **42** in the palm, the location of a line of actuation of the linear actuators **38** in the forearm, and the geometric relation of the linear actuators **38** to the pitch and yaw joints. Referring to FIG. **5**, a graphical representation of the angles P, Y of rotation about the yaw and pitch joints that were derived from a mathematical analysis (described in more detail below) is shown at **43**. By taking full advantage of all these geometric parameters, FIG. **5** shows that the wrist joint assembly (arrow C) can achieve a large range of pitch motion, i.e., approximately 140 degrees of total travel, and a large range of yaw motion, i.e., approximately 60 degrees of total travel. Singularity-free operation with good conditioning for maintaining a near uniform accuracy and strength throughout the operating workspace of the hand **18** and/or the wrist joint assembly (arrow C) may also be achieved with this configuration of the wrist joint assembly (arrow C). Referring again to FIG. **5**, asymmetric travel about the yaw axis C**2** is provided, i.e., approximately −15 degrees to approximately 45 degrees, because the thumb side **44** of the hand **18** precludes travel to one side, due to what would otherwise be a collision of the thumb **21** and a support structure **46** for the thumb **21** of the hand **18** with the lower arm **24**, while allowing the hand **18** to rotate more toward a pinky side **48** of the hand **18**. It should be appreciated that this asymmetry mimics the motion of the human wrist, which is subject to the same rotational constraints about the yaw axis C**2**. As a result, a slender wrist joint assembly (arrow C) is achieved.

To accommodate the large range of motion, while maintaining good strength, the wrist joint assembly (arrow C) includes a plurality of the ball joints **42**. Each of the ball joints **42** includes a socket portion **50** and a ball portion **52**. Each link **40** includes a rod portion **54** and one of the ball portions **52** extends from opposing ends of the respective rod portion **54**. One of the socket portions **50** operatively extends from a respective one of the linear actuators **38**. Additionally, a pair of the socket portions **50** operatively extends from the hand **18**. More specifically, one of the other socket portions **50** may extend from the support structure **46** on the hand **18**, near the thumb side **44**, and the other socket portion **50** may extend from the hand **18**, near the pinky side **48**. The ball portions **52** of each link **40** are in engagement with one of the socket portions **50** of the hand **18** and of the corresponding linear actuator **38** such that the link **40** articulates relative to the respective socket portion **50**. Each socket portion **50** includes a base portion **56** and a pair of flange portions **58**. The pair of flange portions **58** extend from the base portion **56** in spaced relationship to define a socket opening **60** therebetween. The socket opening **60** is configured to receive the respective ball portion **52**. A slit **62** is defined between edges **64** of the pair of flange portions **58**. The slit **62** is configured such that a portion of the rod portion **54** of the respective link **40** movably passes therebetween when articulating the wrist joint assembly (arrow C). The base portion **56** is configured to extend from either the linear actuator **38** or the hand **18**. The ball joints **42** may be optimized for the wrist joint assembly (arrow C). Referring again to FIG. **5**, since the angle P of the pitch motion is over twice as large as the angle Y of the yaw motion, the socket opening **60** of the socket portion **50** of the ball joint **42** is elongated in the pitch direction, i.e., as the hand **18** rotates about the pitch axis C**1**, to facilitate insertion of the respective ball portion **52** during assembly of the ball joint **42**. The base portion **56** also presents a contact surface **66**. The contact surface **66** may be a face of a screw that retracts to allow insertion of the ball portion **52** into the socket portion **50**. The screw may then be screwed toward the ball portion **52** to snug the ball portion **52** into a backlash-free contact between the ball portion **52** and the screw face. The surface of the screw face and any interior contact regions of the socket portion **50** may be machined to the same spherical radius as the ball portion **52** to provide a good spherical constraint that spreads contact stresses evenly. Providing a good spherical constraint between the ball portion **52** and the socket portion **50**, allows high actuation forces to be transmitted to the wrist joint assembly. In the present embodiment, the ball joints **42** may be configured to exert a force to the wrist joint assembly (arrow C) that are in excess of 530 N (120 lbf) in push or pull, without dislocating the connection between the links **40** and the ball joints **42**.

Each linear actuator **38** is configured for independent linear movement, relative to the lower arm **24**. Therefore, the link **40** that corresponds to the respective linear actuator **38** also moves in response to movement of the linear actuator **38**. As a result of movement of the link **40**, the hand **18** moves (i.e., rotates) about at least one of the yaw and pitch axes C**2**, C**1**. While the linear actuators **38** are configured to move independently, whether the hand **18** rotates about the yaw axis C**2**, the pitch axis C**1**, or the yaw and pitch axes C**2**, C**1** simultaneously is determined by the relative movement of the linear actuators **38**. More specifically, the linear actuators **38** are configured to move in the same direction at approximately the same speed to rotate the hand **18** about only the pitch axis C**1** and the linear actuators **38** are configured to move in opposing directions at approximately the same speed to rotate the hand **18** only about the yaw axis C**2**. Therefore, the linear actuators **38** are configured to rotate the hand **18** about the pitch and yaw axes C**1**, C**2** simultaneously by moving both of the linear actuators **38** at different speeds relative to one another.

It should be understood that due to the spatial geometry of the wrist and particularly due to its asymmetric geometry, the precise relationship between linear actuator's **38** speeds and the resulting pitch and yaw angle speeds is nonlinear. Such nonlinearities are observable in FIG. **5**, where the solid curved lines represent motion in which one of the linear actuators **38** moves while the other is stationary and the dashed curved lines represent motion in which the roles of the

two linear actuators **38** is reversed. For any pair of pitch and yaw angles (P,Y), the corresponding displacements of the linear actuators **38** is determined by the intersection of a solid curve with a dashed curve in FIG. **5** at (P,Y). Coordinated motion of the pitch and yaw axes is attained by computing the corresponding coordinated motion of the linear actuators **38** either by solving the nonlinear kinematic equations or by interpolating in a look-up table of pre-computed values. Details of the nonlinear calculation procedure are given below.

In an alternate embodiment, shown in FIGS. **6** and **7**, the wrist joint assembly (arrow C) is adapted to provide series-elastic actuation. Series-elastic actuation is provided when the linear actuator **38** drives the output through a spring element **68** instead of the links **40**. By measuring the deflection D of this spring element **68** and knowing its stiffness, one can monitor the force being exerted on the wrist joint assembly (arrow C). When the robot **10** makes contact with the object, the spring element **68** absorbs the shock resulting from the contact. On a longer time scale, a robot **10** controller **70** monitors the force of the contact and can command the linear actuator **38** in a closed-loop wrist joint assembly (arrow C) to regulate the force of contact. The series-elastic actuation may be accomplished by using one of the spring elements **68** with a respective linear actuator **38**. Referring to FIGS. **6** and **7**, the spring element **68** may be used in place of the rigid links **40**. Referring specifically to FIG. **6**, the spring elements **68** are elastic members. In this embodiment, the spring elements **68** are coil springs **72** that are formed from a material with a low elastic modulus. Referring specifically to FIG. **7**, the spring elements **68** are formed as a push-pull link **40** using compressible material. Alternatively, the spring element **68** may be placed within the linear actuator **38** such that the spring element **68** interconnects a head portion **74** and the socket portion **50** of the linear actuator **38**. Likewise, the spring element **68** may be placed between a palm link **76** and the corresponding socket portion **50**. In yet another embodiment, the spring element **68** may be attached to a frame **78** of the forearm. In these embodiments just described, the links **40** operate in pure tension/compression, due to the ball joints **42** at the opposing ends of the links **40**. As a result of the pure tension/compression, lateral deflection and/or bending moments of the links **40** do not become an issue. In addition to an elastic drive-train member, such as the spring element **68**, series-elastic actuation requires a measurement of the deflection of the spring element **68**. In any of the above placements of the spring element **68**, deflection D may be measured by a deflection measurement device **80**, such as strain gauges that are mounted on the spring element **68**, by magnetic Hall sensors, by optical methods, by changes in electrical resistance, or any other known device configured to measure deflection D known to those skilled in the art. An alternative to direct measurement of the spring element **68** deflection D is to measure the deflection D indirectly by measuring both the positions of the sliders and the corresponding pitch and yaw angles P, Y of the wrist joint assembly. The position of the linear actuators **38** may be measured by optical encoders on motors (not shown) that drive the linear actuators **38**. Also, the pitch and yaw angles P, Y are measured by sensors (not shown), such as magnetic Hall sensors, miniature optical encoders, and the like. By measuring the pitch and yaw angles P, Y, the positions of ball centers of the socket portion **50** in the hand **18** may be calculated with respect to the lower arm **24**. By measuring the positions of the linear actuators **38**, the position of the corresponding centers of the ball portions **52** of the socket portion **50** in the lower arm **24** may also be determined. A distance between the ball centers at either end of a push-pull link **40** may then be calculated to reveal a deflected length of the corresponding link **40**.

Additionally, an input-output relation between the pitch and yaw angles P, Y and the linear actuator **38** displacement may be calculated. Computing the displacement of each linear actuator **38** to produce a desired pitch and yaw angle P, Y is determined using the following steps. It is understood that these same steps are carried out separately for each of the two linear actuators **38** for a given pitch and yaw (P,Y). (Step **1**) At the home position (P,Y)=(0,0), establish a coordinate system fixed in the lower arm **24** with origin at the ball center **42** at the head of the linear actuator **38** and with the z-axis aligned with the line of action of the actuator **38** pointing towards the hand **18**. For any configuration of the wrist, let q be the displacement of the actuator **38** measured along the z-axis from the origin. By this construction, q=0 when the wrist is in the home position. (Step **2**) For a general position (P,Y), compute the location of the center of the ball joint **42** at the other end of the push-pull link **40**. Express this position as (x, y, z) in the coordinate system established in Step **1**. It is understood that computing (x, y, z) as a function of (P,Y) is done by standard means of computing the forward kinematics of a serial-link chain, in this case such chain consisting of the lower arm **78**, the intervening wrist link, and the palm link **76** with angle of rotation P about axis C**1** and angle of rotation Y about axis C**2**. (Step **3**) Let L be the known length of the push-pull link measured from one ball center **42** to the other. (Step **4**) Then, the displacement q of the linear actuator is $q=z-\sqrt{L^2-x^2-y^2}$.

The other direction, i.e., computing the pitch and yaw given the current displacements of the linear actuators **38**, is more difficult because it is governed by polynomial equations that have up to eight roots. Although an algebraic formulation of the solution may be used to obtain the pitch and yaw angles P, Y, a more computationally efficient alternative of building a 2-input, 2-output look-up table, based on the same algebraic formulation, may also be used. The look-up table may be interpolated and formed into the graphical representation **43** shown in FIG. **5**. The method may be implemented to run within a control system **84** within the robot **10** that is operatively connected to the wrist joint assembly (arrow C).

While the best modes for carrying out the invention have been described in detail, those familiar with the art to which this invention relates will recognize various alternative designs and embodiments for practicing the invention within the scope of the appended claims

The invention claimed is:

1. A wrist joint assembly operatively defined between a lower arm and a hand of a humanoid robot, the wrist joint assembly comprising:

a pair of links operatively interconnecting the lower arm and the hand;

wherein the links extend in a spaced and generally parallel relationship to one another;

a pair of linear actuators operatively interconnecting the lower arm and a respective one of the pair of links;

a yaw axis;

a pitch axis disposed in a spaced and generally perpendicular relationship to the yaw axis;

wherein the pitch axis is disposed between the yaw axis and the lower arm such that the yaw axis and the pitch axis do not intersect one another;

wherein the hand is rotatable relative to the lower arm about each of the yaw axis and the pitch axis;

wherein each of the linear actuators is configured for independent linear movement, relative to the lower arm, such

that the respective one of the pair of links moves in response to movement of the respective linear actuator to move the hand about at least one of the yaw axis and the pitch axis;

wherein each of the pair of linear actuators is configured to move in the same direction such as that the hand rotates at least about the pitch axis; and

wherein each of the pair of linear actuators is configured to move in opposite directions such that the hand rotates at least about the yaw axis.

2. A wrist joint assembly, as set forth in claim **1**, wherein the hand is configured to rotate relative to the lower arm 60 degrees about the yaw axis and 140 degrees about the pitch axis.

3. A wrist joint assembly, as set forth in claim **2**, wherein the hand is configured to rotate relative to the lower arm from between −15 degrees and 45 degrees about the yaw axis.

4. A wrist joint assembly, as set forth in claim **1**, wherein the wrist joint assembly defines a pass-through configured to accommodate transmission elements that connect the lower arm to at least one of the hand.

5. A wrist joint assembly, as set forth in claim **1**, wherein the pair of linear actuators are configured to move simultaneously in the same direction at an equal linear speed such that the hand only rotates about the pitch axis;

wherein the pair of linear actuators are configured to move simultaneously in opposing directions at approximately equal linear speed such that the hand only rotates about the yaw axis; and

wherein the pair of linear actuators are configured to move simultaneously at different linear speeds such that the hand rotates about the yaw and pitch axes simultaneously.

6. A wrist joint assembly, as set forth in claim **1**, wherein each of the links are attached to the hand and the respective one of the pair of linear actuators at a ball joint.

7. A wrist joint assembly, as set forth in claim **6**, wherein the ball joint includes a socket portion and a ball portion rotatably disposed in the socket portion; wherein the ball portion extends from opposing ends of each of the links.

8. A wrist joint assembly, as set forth in claim **7**, wherein the socket portion includes:

a base portion;

a pair of flanges extending from the base portion in spaced relationship to define a socket opening therebetween;

wherein the socket opening is configured for receiving the respective ball portion therebetween;

wherein a slit is defined between edges of the pair of flange portions such that a portion of the respective link movably extends through the slit when the hand is moving relative to the lower arm.

9. A wrist joint assembly, as set forth in claim **8**, wherein the base portion presents a contact surface facing the socket opening;

wherein the contact surface includes a screw that is configured to retract away from the socket opening to allow insertion of the ball portion into the socket portion;

wherein the screw is configured to be extended toward the socket opening to snug the ball portion into contact with the ball portion.

10. A wrist joint assembly, as set forth in claim **1**, wherein at least one of the links and the respective linear actuator includes a spring element configured to provide series-elastic actuation.

11. A wrist joint assembly, as set forth in claim **10**, wherein the spring element is a coil spring.

12. A wrist joint assembly, as set forth in claim **10**, wherein the spring element is formed from a compressible material.

13. A wrist joint assembly, as set forth in claim **10**, further comprising a deflection measurement device in operative communication with the spring element;

wherein the deflection measurement device is configured to measure deflection of the spring element.

14. A humanoid robot comprising:

a torso;

a pair of arms movably extending from the torso;

wherein each of the arms includes a lower arm and a hand, rotatable relative to the lower arm;

a neck movably extending from the torso;

a head movably extending from the neck;

a wrist joint assembly operatively defined between the lower arm and the hand, the wrist joint assembly including;

a yaw axis,

a pitch axis disposed in a spaced and generally perpendicular relationship to the yaw axis,

wherein the pitch axis is disposed between the yaw axis and the lower arm such that the yaw axis and the pitch axis do not intersect one another,

wherein the hand is rotatable relative to the lower arm about each of the yaw axis and the pitch axis; and

a control system configured for determining a yaw angle and a pitch angle of the wrist joint assembly.

15. A wrist joint assembly operatively defined between a lower arm and a hand of a humanoid robot, the wrist joint assembly comprising:

a pair of links operatively interconnecting the lower arm and the hand;

wherein the links extend in a spaced and generally parallel relationship to one another;

a pair of linear actuators operatively interconnecting the lower arm and a respective one of the pair links;

a yaw axis;

a pitch axis disposed in a spaced and generally perpendicular relationship to the yaw axis;

wherein the pitch axis is disposed between the yaw axis and the lower arm such that the yaw axis and the pitch axis do not intersect one another;

wherein the hand is rotatable relative to the lower arm about each of the yaw axis and the pitch axis;

wherein each of the linear actuators is configured for independent linear movement, relative to the lower arm, such that the respective one of the pair of links moves in response to movement of the respective linear actuator to move the hand about at least one of the yaw axis and the pitch axis;

wherein at least one of the links and the respective linear actuator includes a spring element configured to provide series-elastic actuation; and

a deflection measurement device in operative communication with the spring element; wherein the deflection measurement device is configured to measure deflection of the spring element.

16. A wrist joint assembly, as set forth in claim **15**, wherein the hand is configured to rotate relative to the lower arm 60 degrees about the yaw axis and 140 degrees about the pitch axis.

17. A wrist joint assembly, as set forth in claim **16**, wherein the hand is configured to rotate relative to the lower arm from between −15 degrees and 45 degrees about the yaw axis.

18. A wrist joint assembly, as set forth in claim **15**, wherein the spring element is a coil spring.

19. A wrist joint assembly, as set forth in claim **15**, wherein the spring element is formed from a compressible material.

* * * * *